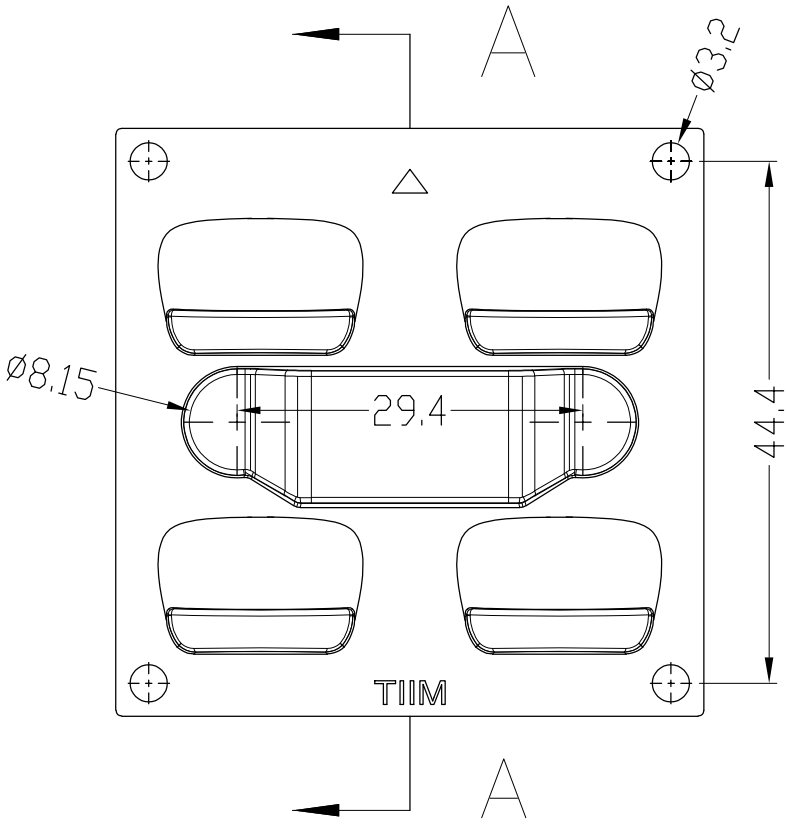

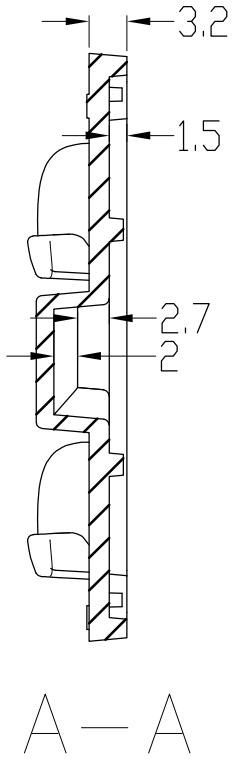

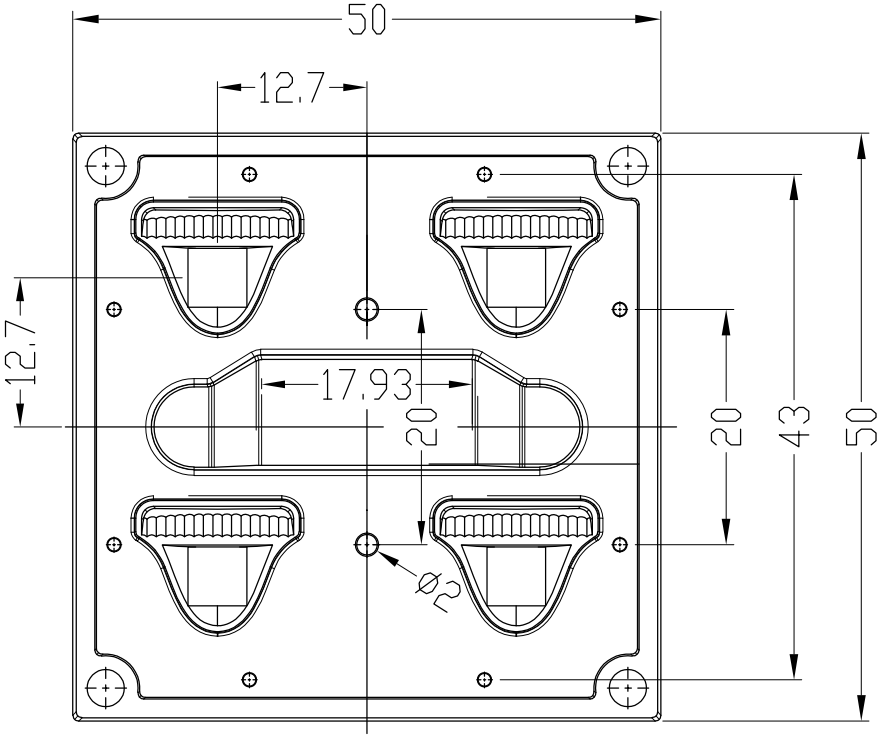

NOTE:
1. ALL SURFACES NO SHRINKAGE, BURRS, JUNCTION LINES ALLOWED
2. CRITICAL DIMENSIONS ARE INDICATED ON THE DRAWING
3. ALL INDICATED SURFACES ARE POLISHED, THE OPTICAL SURFACE POLISHING MUST BE SPI-A1 STANDARD
4. THE PARTS IS COMPLIANT TO ROHS AND REACH STANDARD

CHANGE												
					PART 0~10	±0.05	颜色 COLOR	Transparency		SOALE	1:1	ASAHI OPTICS LIMITED
					10~20	±0.10	材质 MATERIAL	PC		UNIT	mm	
					20~30	±0.15						
	A/0	2025-08-04	NEW	——	——	30~40	±0.20	设计 DESIGN	Ryan	2025-08-04	SIZE	A4	料号 PART NO:
	版次 REV	日期 DATE	变更说明 MODIFICATION DESCRIPTION	变更 CHANGE	核准 APPROVE	Angie	± 1°	核准 APPROVE			SHEET	品名 Product: AJST50D4LEDT2M
						DIM	TOL					