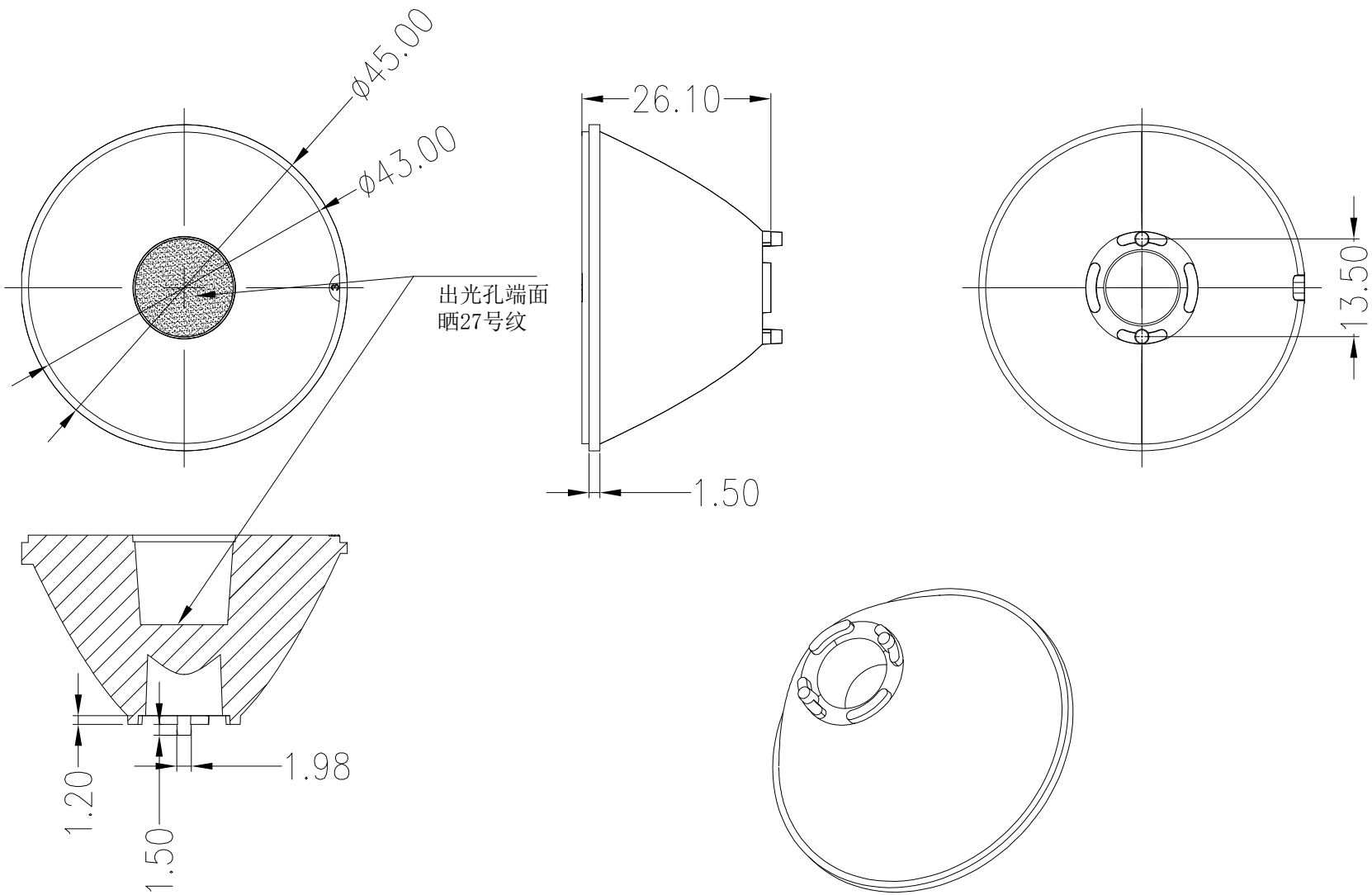

NOTE:
1. ALL SURFACES NO SHRINKAGE, BURRS, JUNCTION LINES ALLOWED
2. CRITICAL DIMENSIONS ARE INDICATED ON THE DRAWING
3. ALL INDICATED SURFACES ARE POLISHED, THE OPTICAL SURFACE POLISHING MUST BE SPI-A1 STANDARD
4. THE PARTS IS COMPLIANT TO ROHS AND REACH STANDARD

CHANGE					
	A/0	2025-08-04	NEW		
	版次 REV	日期 DATE	变更说明 MODIFICATION DESCRIPTION	变更 CHANGE	核准 APPROVE

PART	
0 ~ 10	±0.05
10 ~ 20	±0.10
20 ~ 30	±0.15
30 ~ 40	±0.20
Angie	± 1°
DIM	TOL

颜色 COLOR	Transparency		SOALE	1:1
材质 MATERIAL	PMMA		UNIT	mm
设计 DESIGN	Ryan	2025-08-04	SIZE	A4
核准 APPROVE			SHEET	

ASSHI ASAHI OPTICS LIMITED

料号 PART NO:

品名 Product: AJS45DRGBW3G